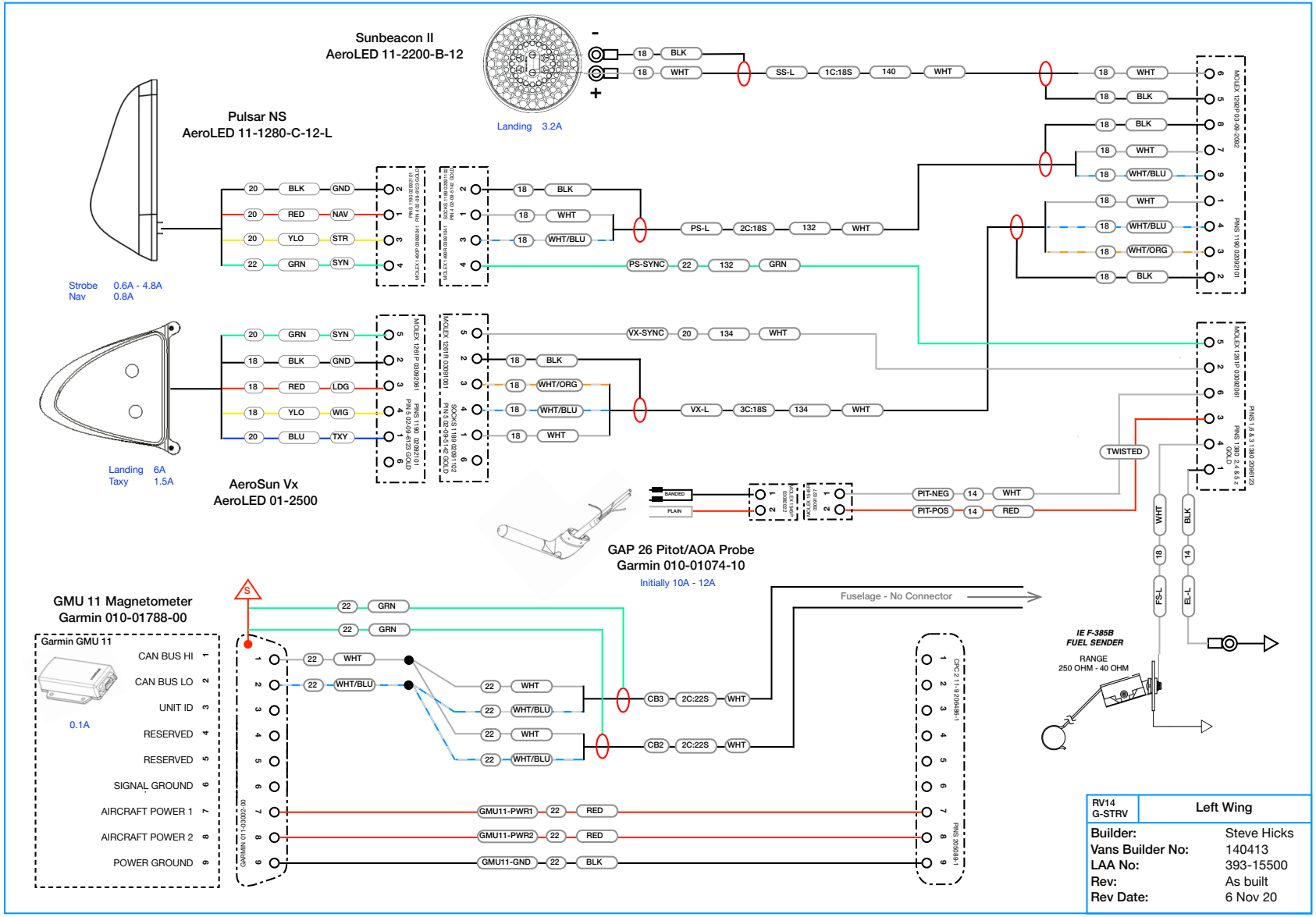

VANS RV14 G-STRV

Electrical Reference Manual

SECTION 2 - AIRFRAME HARNESSES

Left Wing